SECTION H-H
M 1 : 2

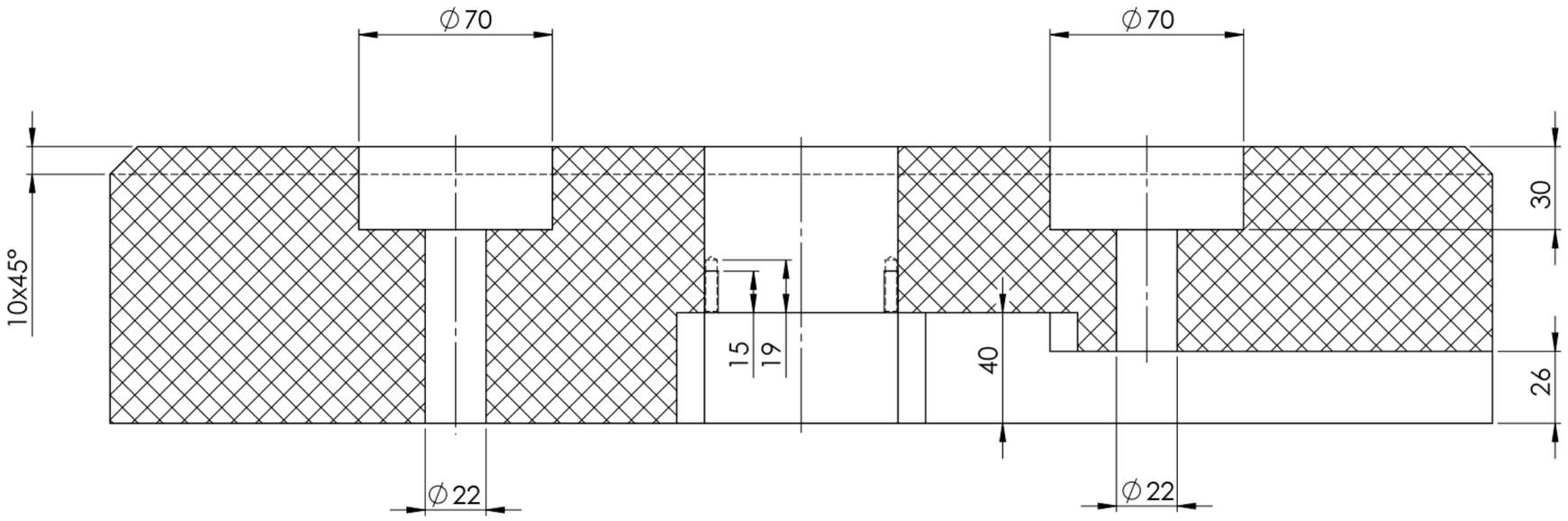

Isometric View:

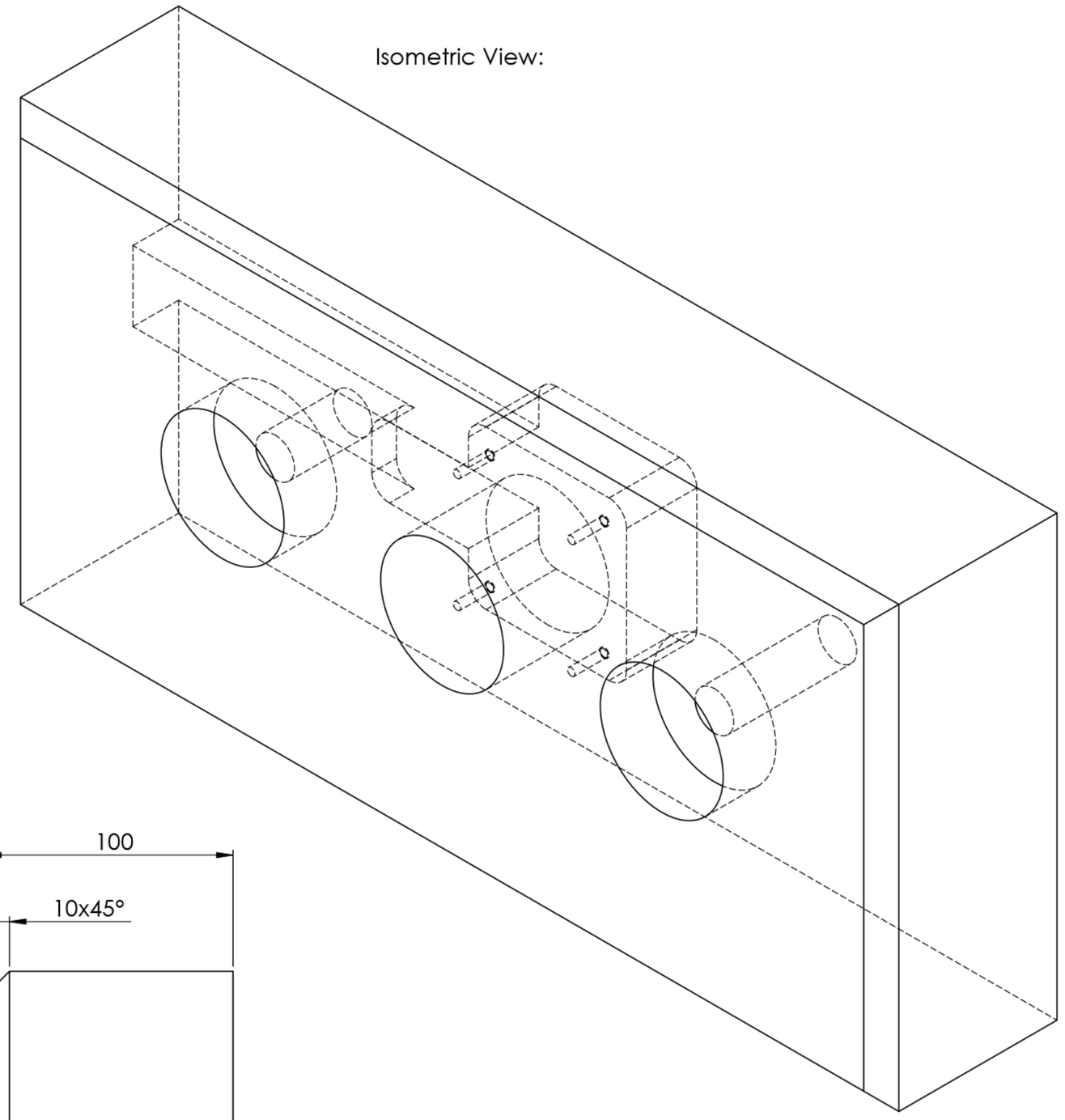

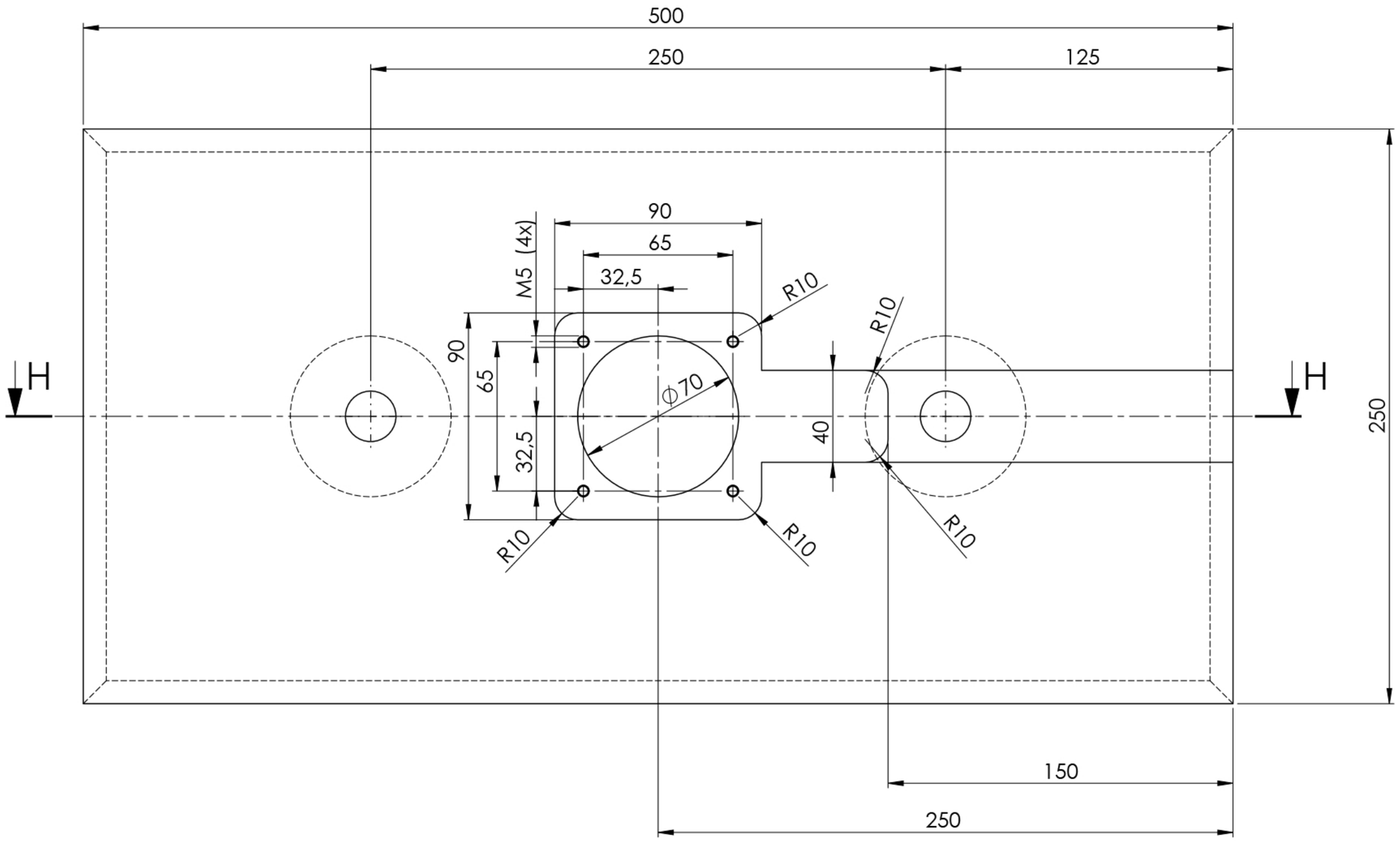

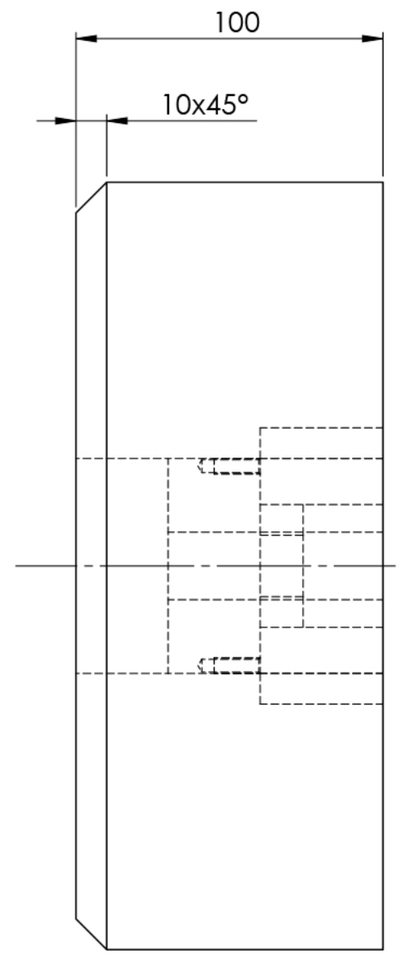

It is forbidden by law to copy, duplicate this document, to transmit it to any third party or to misuse it in any way.
The drawing remains our property and is to be returned immediately after use.

General Tolerance: ISO 2768-mK

Debur and break sharp edges

	Name	Date
Drawn	Turbanisch	28.01.2013
Checked	Turbanisch	29.01.2013
Quality-A.		

Last Saved: turbanisch 29.01.2013 08:05:34

mydocking.com
Docking Solution und Service GmbH
Springrad 4, D-30419 Hannover

Scale: 1:5 | Revision: 00

Semifinished product:

Title:
Novo Easy Buffer for Sensor

Drawing Number:
040-NF-BUF-132799

A2

Sheet 1 of 1

Material: Nytrex (yellow) | Weight: 12.492 Kg.