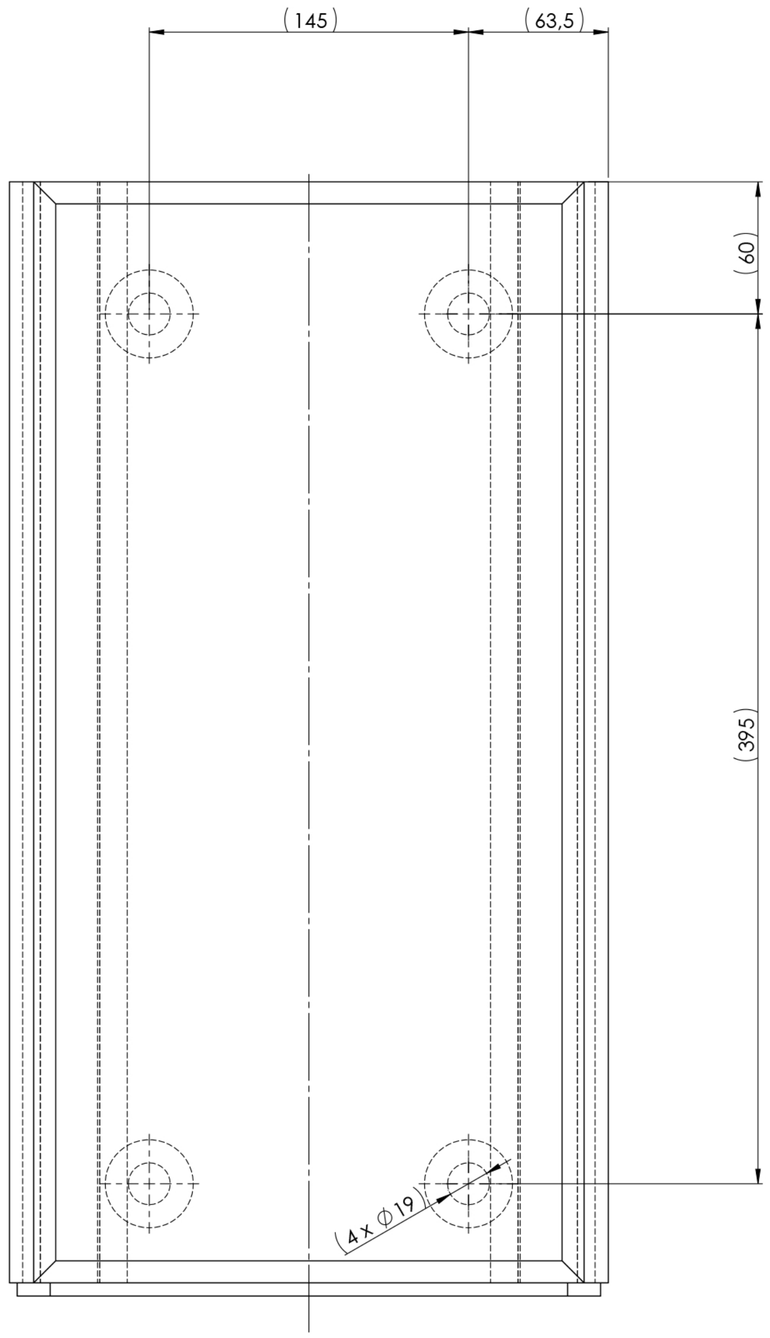

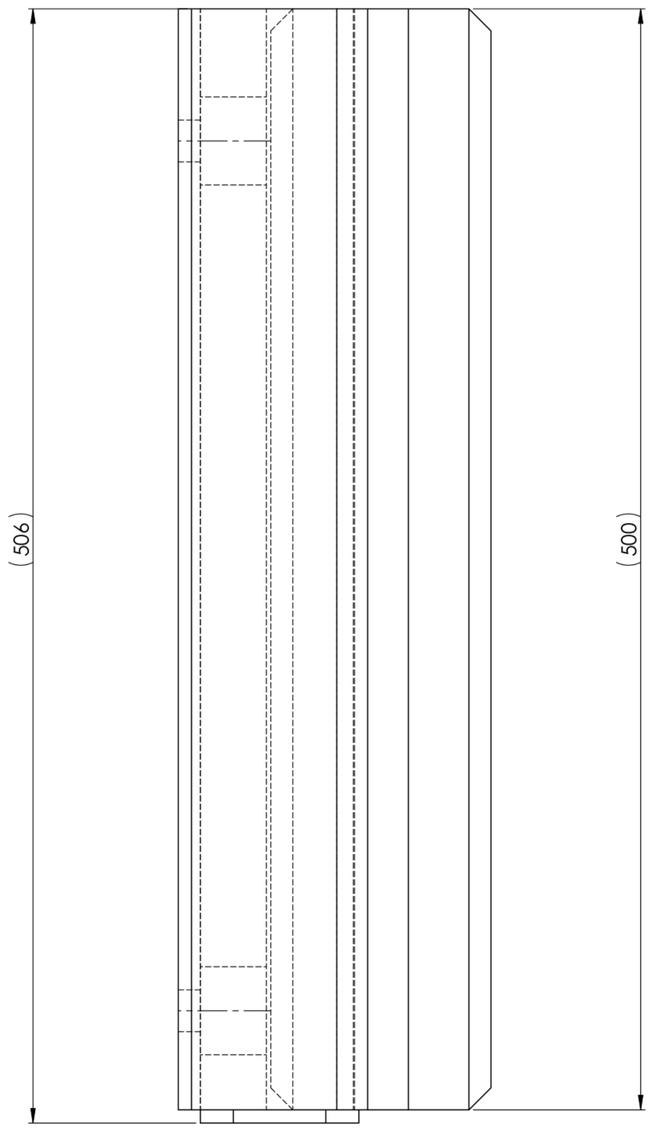

Isometric View:

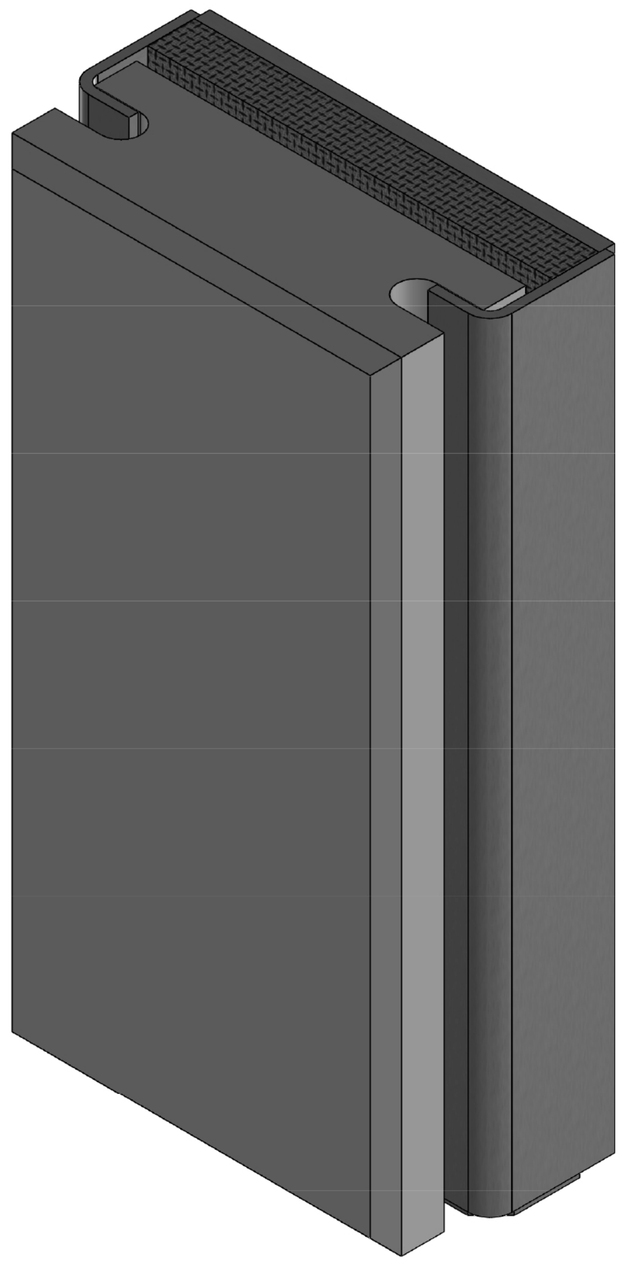

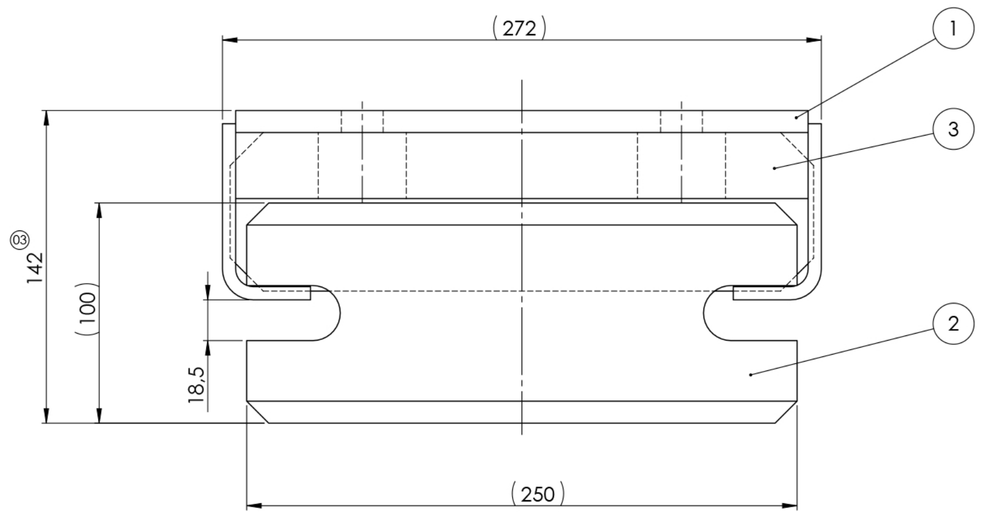

Item	Qty.	Description	Drawing No.	Standard	Material
3	1	Rubber Plate for Novo Slider Buffer	040-NF-BUF-132460		Recycled Rubber with Polyurethane
2	1	Contact Plate 100mm for Novo Slider Buffer 140	040-NF-BUF-132566		Nytrex (yellow)
1	1	Wall Part for Novo Slider Buffer 140	040-NF-BUF-132574		

Revision	Modification	Date	Name
05	Measure and subpart changed	10.07.2013	Turbanisch
04	Density of subpart changed	11.02.2013	Turbanisch

It is forbidden by law to copy, duplicate this document, to transmit it to any third party or to misuse it in any way.
The drawing remains our property and is to be returned immediately after use.

General Tolerance: EN ISO 13920

Debur and break sharp edges

	Name	Date
Drawn	B. Octavian	07.09.2012
Checked	Turbanisch	10.07.2013
Quality-A.		

Last Saved: turbanisch 10.07.2013 08:27:40

Scale: 1:2

Revision: 05

Semifinished product:

Title:

Novo Slider Buffer 140 complete

Drawing Number: 040-NF-BUF-132576

A1

Sheet 1 of 1

Material:

Weight: 30.3 Kg.

mydocking.com
Docking Solution und Service GmbH
Springrad 4, D-30419 Hannover