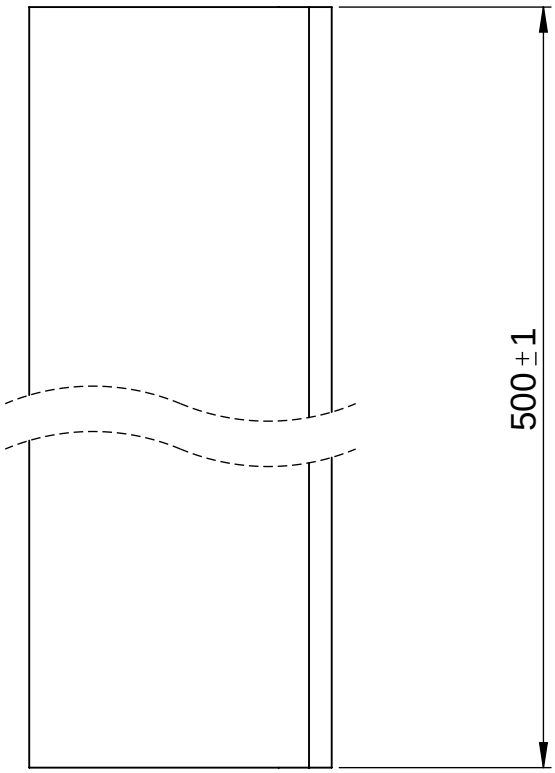

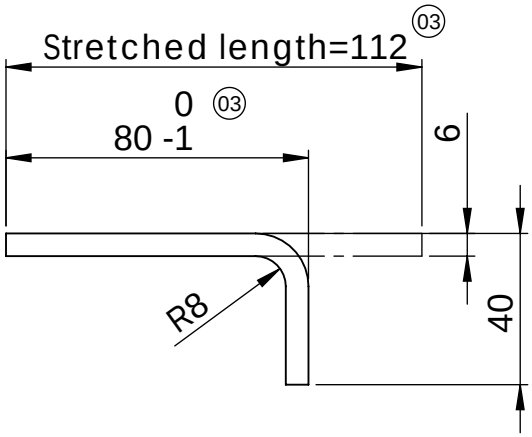

Revision	Modification	Date	Name
03	Measure changed from 78 to 80, 110 to 112	10.07.2013	Turbanisch

It is forbidden by law to copy, duplicate this document, to transmit it to any third party or to misuse it in any way.
The drawing remains our property and is to be returned immediately after use.

General Tolerance: ISO 2768-mK

Debur and break sharp edges

Scale: 1:2

Revision: 03

Semifinished product: Plate 6 EN 10029

	Name	Date
Drawn	B. Octavian	07.09.2012
Checked	Turbanisch	10.07.2013
Quality-A.		

Last Saved: turbanisch 10.07.2013 08:26:59

Title: Guiding Angle for Novo Slider Buffer 140

mydocking.com
Docking Solution und Service GmbH
Springrad 4, D-30419 Hannover

Drawing Number: 040-NF-BUF-132570

A4

Sheet 1 of 1

Material: S235JRG2 hot dip galvanised

Weight: 2.557 Kg.