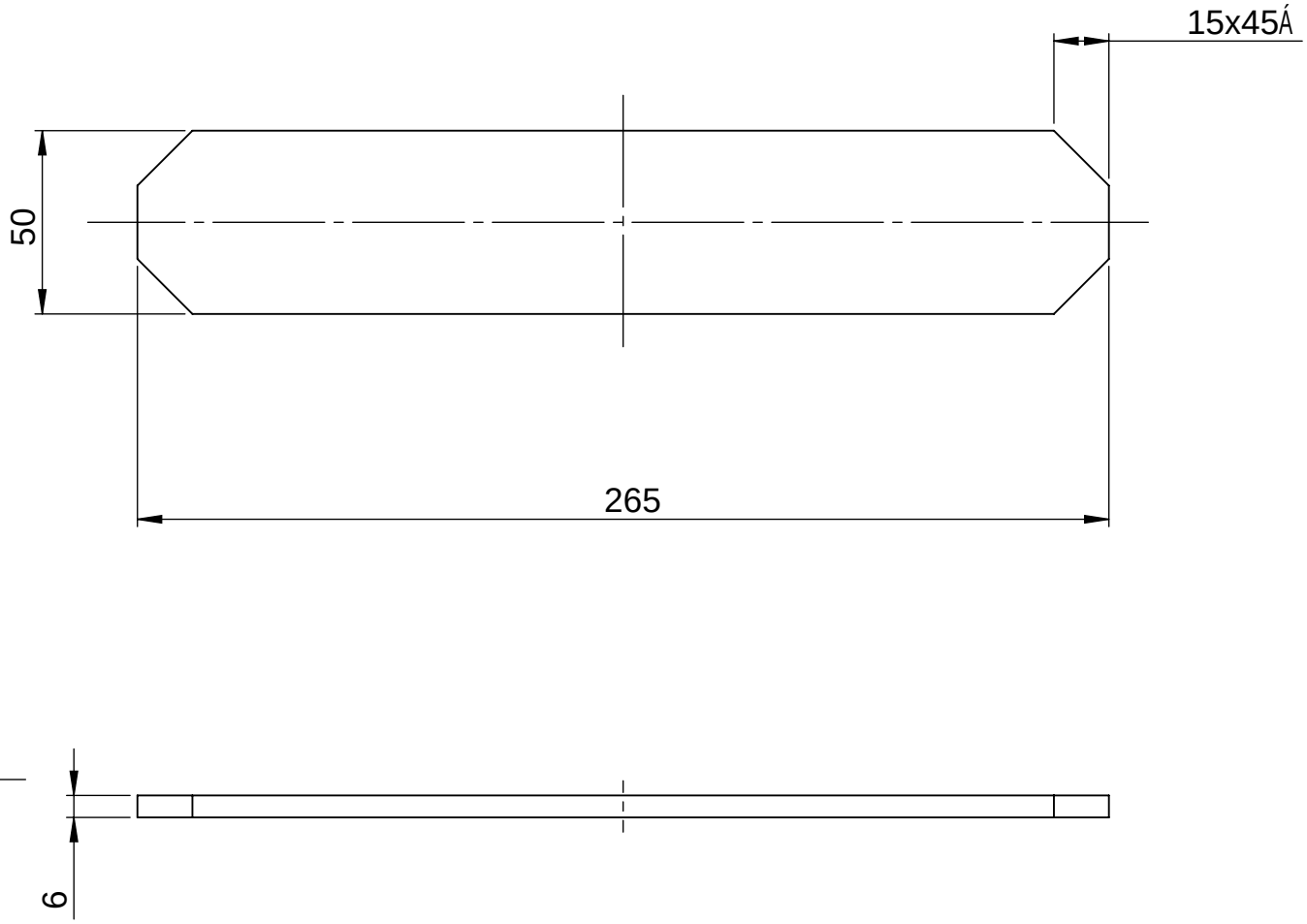

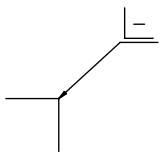

It is forbidden by law to copy, duplicate this document, to transmit it to any third party or to misuse it in any way.
The drawing remains our property and is to be returned immediately after use.

General Tolerance: ISO 2768-mK

Debur and break sharp edges

Scale: 1:2

Revision: 01

Semifinished product: Plate 6 EN 10029

	Name	Date
Drawn	Turbanisch	22.01.2013
Checked	Turbanisch	24.01.2013
Quality-A.		

Last Saved: turbanisch 24.01.2013 11:03:17

Title: Bottom Plate for Novo Slider Buffer 100

mydocking.com
Docking Solution und Service GmbH
Springrad 4, D-30419 Hannover

Drawing Number: 040-NF-BUF-132784

A4

Sheet 1 of 1

Material: S235JRG2 hot dip galvanised

Weight: 0.599 Kg.